UNIVERSITY OF CAMBRIDGE INTERNATIONAL EXAMINATIONS
General Certificate of Education Advanced Level

CANDIDATE NAME

CENTRE NUMBER

CANDIDATE NUMBER

8365187983

PHYSICS **9702/43**

Paper 4 A2 Structured Questions **October/November 2010**

1 hour 45 minutes

Candidates answer on the Question Paper.

No Additional Materials are required.

READ THESE INSTRUCTIONS FIRST

Write your Centre number, candidate number and name on all the work you hand in.
Write in dark blue or black pen.
You may use a soft pencil for any diagrams, graphs or rough working.
Do not use staples, paper clips, highlighters, glue or correction fluid.
DO **NOT** WRITE IN ANY BARCODES.

Answer **all** questions.
You may lose marks if you do not show your working or if you do not use appropriate units.

At the end of the examination, fasten all your work securely together.
The number of marks is given in brackets [ ] at the end of each question or part question.

For Examiner's Use	
1	
2	
3	
4	
5	
6	
7	
8	
9	
10	
11	
12	
Total	

This document consists of **23** printed pages and **1** blank page.

© UCLES 2010

Data

speed of light in free space,	$c = 3.00 \times 10^{8}\ \text{m s}^{-1}$
permeability of free space,	$\mu_0 = 4\pi \times 10^{-7}\ \text{H m}^{-1}$
permittivity of free space,	$\varepsilon_0 = 8.85 \times 10^{-12}\ \text{F m}^{-1}$
elementary charge,	$e = 1.60 \times 10^{-19}\ \text{C}$
the Planck constant,	$h = 6.63 \times 10^{-34}\ \text{J s}$
unified atomic mass constant,	$u = 1.66 \times 10^{-27}\ \text{kg}$
rest mass of electron,	$m_e = 9.11 \times 10^{-31}\ \text{kg}$
rest mass of proton,	$m_p = 1.67 \times 10^{-27}\ \text{kg}$
molar gas constant,	$R = 8.31\ \text{J K}^{-1}\ \text{mol}^{-1}$
the Avogadro constant,	$N_A = 6.02 \times 10^{23}\ \text{mol}^{-1}$
the Boltzmann constant,	$k = 1.38 \times 10^{-23}\ \text{J K}^{-1}$
gravitational constant,	$G = 6.67 \times 10^{-11}\ \text{N m}^2\ \text{kg}^{-2}$
acceleration of free fall,	$g = 9.81\ \text{m s}^{-2}$

© UCLES 2010

Formulae

uniformly accelerated motion, $s = ut + \frac{1}{2}at^2$

$v^2 = u^2 + 2as$

work done on/by a gas, $W = p\Delta V$

gravitational potential, $\phi = -\frac{Gm}{r}$

hydrostatic pressure, $p = \rho gh$

pressure of an ideal gas, $p = \frac{1}{3}\frac{Nm}{V}\langle c^2 \rangle$

simple harmonic motion, $a = -\omega^2 x$

velocity of particle in s.h.m., $v = v_0 \cos \omega t$

$v = \pm \omega \sqrt{(x_0^2 - x^2)}$

electric potential, $V = \frac{Q}{4\pi\varepsilon_0 r}$

capacitors in series, $1/C = 1/C_1 + 1/C_2 + \ldots$

capacitors in parallel, $C = C_1 + C_2 + \ldots$

energy of charged capacitor, $W = \frac{1}{2}QV$

resistors in series, $R = R_1 + R_2 + \ldots$

resistors in parallel, $1/R = 1/R_1 + 1/R_2 + \ldots$

alternating current/voltage, $x = x_0 \sin \omega t$

radioactive decay, $x = x_0 \exp(-\lambda t)$

decay constant, $\lambda = \frac{0.693}{t_{\frac{1}{2}}}$

© UCLES 2010

Section A

Answer **all** the questions in the spaces provided.

1 A planet of mass m is in a circular orbit of radius r about the Sun of mass M, as illustrated in Fig. 1.1.

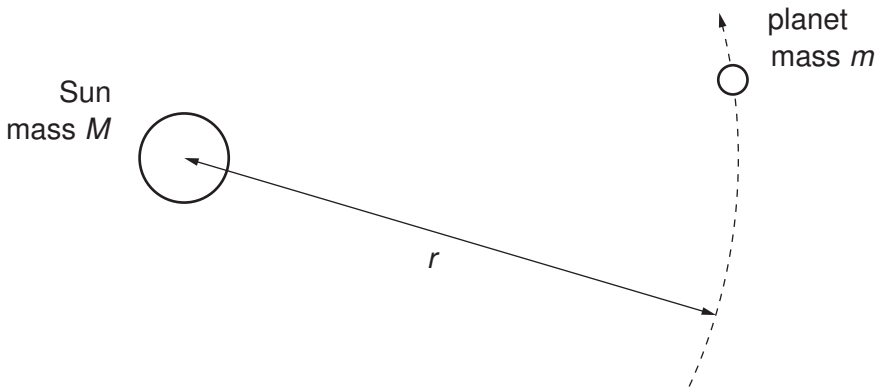

Fig. 1.1

The magnitude of the angular velocity and the period of revolution of the planet about the Sun are ω and T respectively.

(a) State

(i) what is meant by *angular velocity*,

.....

.....

.....[2]

(ii) the relation between ω and T.

.....[1]

(b) Show that, for a planet in a circular orbit of radius r, the period T of the orbit is given by the expression

$$T^2 = cr^3$$

where c is a constant. Explain your working.

[4]

(c) Data for the planets Venus and Neptune are given in Fig. 1.2.

planet	r / 10^8 km	T / years
Venus	1.08	0.615
Neptune	45.0	

Fig. 1.2

Assume that the orbits of both planets are circular.

(i) Use the expression in **(b)** to calculate the value of T for Neptune.

T = ... years [2]

(ii) Determine the linear speed of Venus in its orbit.

speed = ... km s^{-1} [2]

© UCLES 2010

2 **(a)** State the basic assumptions of the kinetic theory of gases.

.....

.....

.....

.....

.....

.....[4]

(b) Use equations for the pressure of an ideal gas to deduce that the average translational kinetic energy $<E_K>$ of a molecule of an ideal gas is given by the expression

$$<E_K> = \frac{3}{2}\frac{R}{N_A}T$$

where R is the molar gas constant, N_A is the Avogadro constant and T is the thermodynamic temperature of the gas.

[3]

(c) A deuterium nucleus ${}^{2}_{1}H$ and a proton collide. A nuclear reaction occurs, represented by the equation

$${}^{2}_{1}H + {}^{1}_{1}p \longrightarrow {}^{3}_{2}He + \gamma.$$

(i) State and explain whether the reaction represents nuclear fission or nuclear fusion.

.....

.....

..... [2]

(ii) For the reaction to occur, the minimum total kinetic energy of the deuterium nucleus and the proton is 2.4×10^{-14} J.
Assuming that a sample of a mixture of deuterium nuclei and protons behaves as an ideal gas, calculate the temperature of the sample for this reaction to occur.

temperature = ... K [3]

(iii) Suggest why the assumption made in **(ii)** may not be valid.

.....

.....[1]

© UCLES 2010

3 A cylinder and piston, used in a car engine, are illustrated in Fig. 3.1.

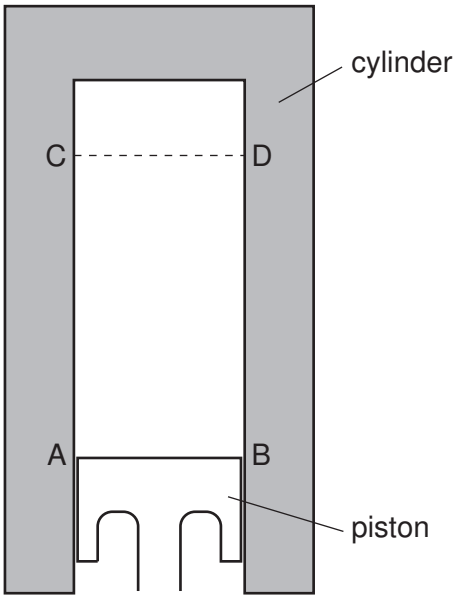

Fig. 3.1

The vertical motion of the piston in the cylinder is assumed to be simple harmonic.
The top surface of the piston is at AB when it is at its lowest position; it is at CD when at its highest position, as marked in Fig. 3.1.

(a) The displacement d of the piston may be represented by the equation

$$d = -4.0\cos(220t)$$

where d is measured in centimetres.

(i) State the distance between the lowest position AB and the highest position CD of the top surface of the piston.

distance = ... cm [1]

(ii) Determine the number of oscillations made per second by the piston.

number = ... [2]

(iii) On Fig. 3.1, draw a line to represent the top surface of the piston in the position where the speed of the piston is maximum. [1]

(iv) Calculate the maximum speed of the piston.

speed = ... cm s^{-1} [2]

(b) The engine of a car has several cylinders. Three of these cylinders are shown in Fig. 3.2.

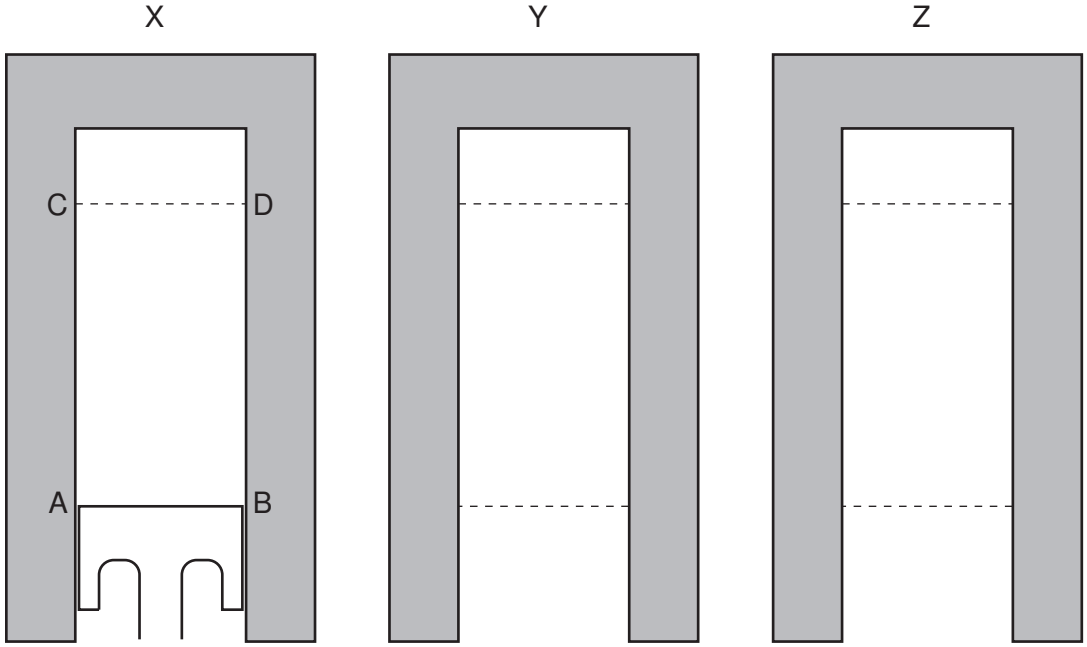

Fig. 3.2

X is the same cylinder and piston as in Fig. 3.1.
Y and Z are two further cylinders, with the lowest and the highest positions of the top surface of each piston indicated.
The pistons in the cylinders each have the same frequency of oscillation, but they are not in phase.
At a particular instant in time, the position of the top of the piston in cylinder X is as shown.

(i) In cylinder Y, the oscillations of the piston lead those of the piston in cylinder X by a phase angle of 120° ($\frac{2}{3}\pi$ rad).
Complete the diagram of cylinder Y, for this instant, by drawing

1. a line to show the top surface of the piston, [1]

2. an arrow to show the direction of movement of the piston. [1]

© UCLES 2010

(ii) In cylinder Z, the oscillations of the piston lead those of the piston in cylinder X by a phase angle of 240° ($\frac{4}{3}\pi$ rad).

Complete the diagram of cylinder Z, for this instant, by drawing

1. a line to show the top surface of the piston, [1]

2. an arrow to show the direction of movement of the piston. [1]

(iii) For the piston in cylinder Y, calculate its speed for this instant.

speed = ... cm s^{-1} [2]

4 **(a)** **(i)** State what is meant by *electric potential* at a point.

.....

.....

..... [2]

(ii) Define *capacitance*.

.....

..... [1]

(b) The variation of the potential V of an isolated metal sphere with charge Q on its surface is shown in Fig. 4.1.

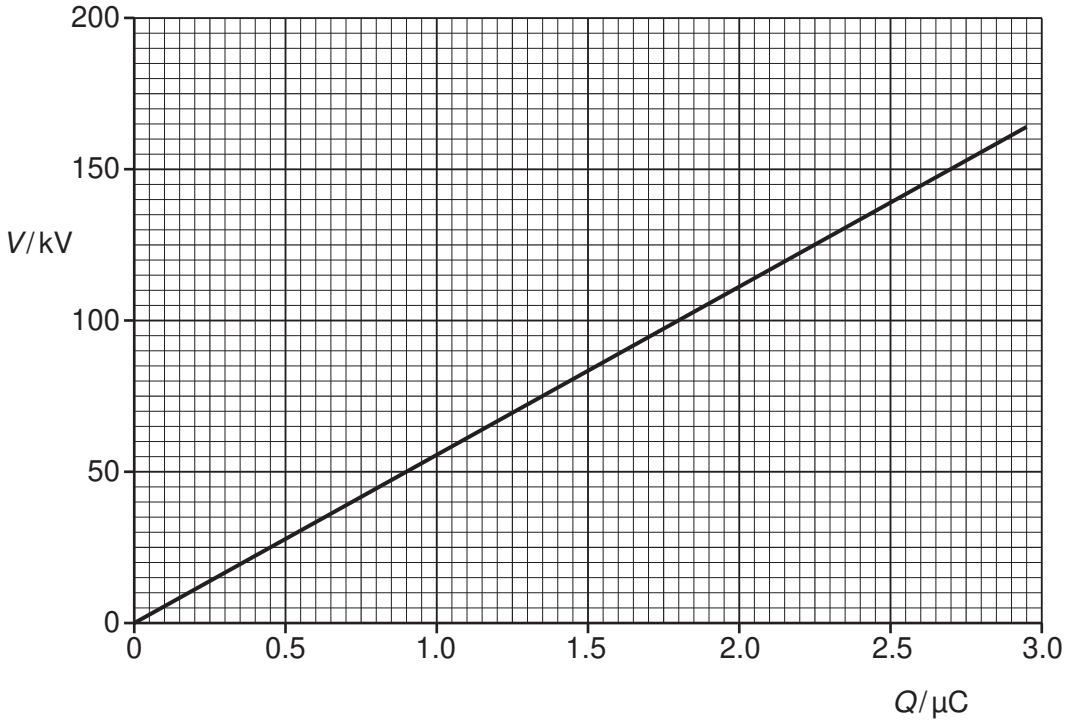

Fig. 4.1

An isolated metal sphere has capacitance.

Use Fig. 4.1 to determine

(i) the capacitance of the sphere,

capacitance = ... F [2]

(ii) the electric potential energy stored on the sphere when charged to a potential of 150 kV.

energy = ... J [2]

(c) A spark reduces the potential of the sphere from 150 kV to 75 kV.
Calculate the energy lost from the sphere.

energy = ... J [2]

5 The poles of a horseshoe magnet measure 5.0 cm × 2.4 cm, as shown in Fig. 5.1.

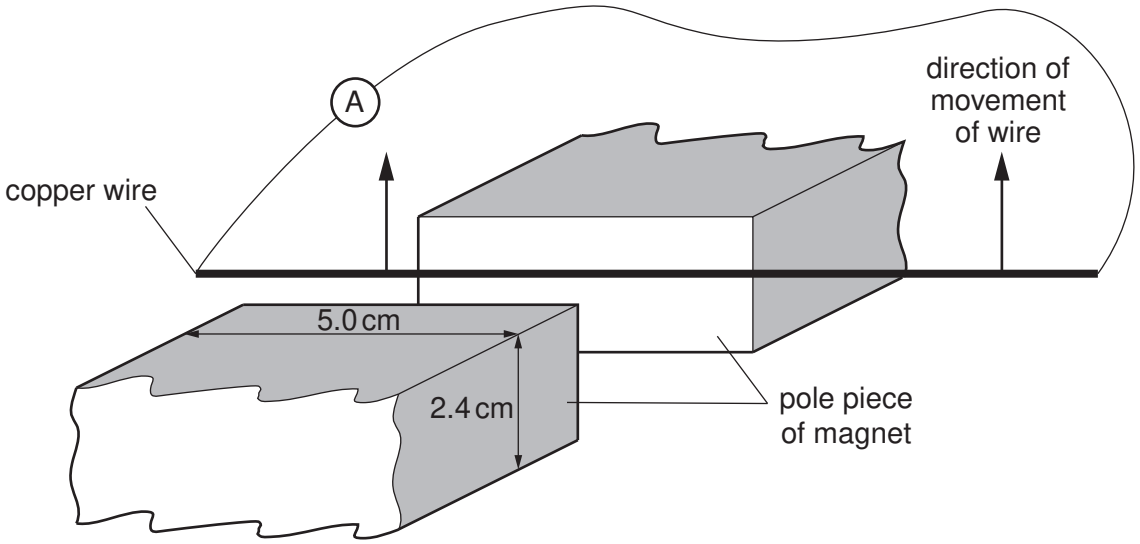

Fig. 5.1

The uniform magnetic flux density between the poles of the magnet is 89 mT. Outside the region of the poles, the magnetic flux density is zero.
A stiff copper wire is connected to a sensitive ammeter of resistance 0.12 Ω. A student moves the wire at a constant speed of 1.8 m s^{-1} between the poles in a direction parallel to the faces of the poles.

(a) Calculate the magnetic flux between the poles of the magnet.

magnetic flux = ... Wb [2]

(b) (i) Use your answer in **(a)** to determine, for the wire moving between the poles of the magnet, the e.m.f. induced in the wire.

e.m.f. = ... V [3]

© UCLES 2010

(ii) Show that the reading on the ammeter is approximately 70 mA.

[1]

(c) By reference to Lenz's law, a force acts on the wire to oppose the motion of the wire. The student who moved the wire between the poles of the magnet claims not to have felt this force.
Explain quantitatively a reason for this claim.

.....

..... [3]

6 The variation with time t of the current I in a resistor is shown in Fig. 6.1.

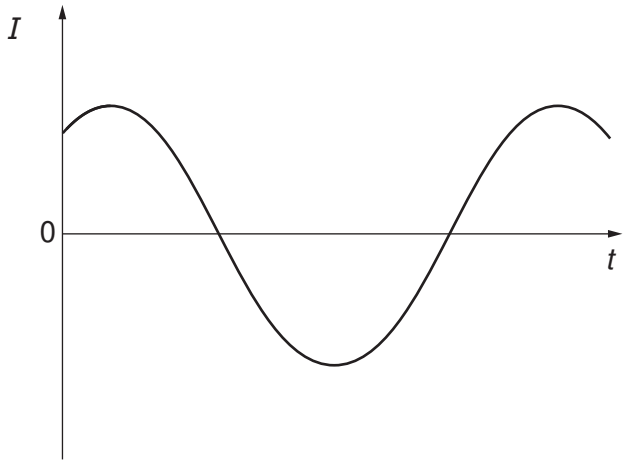

Fig. 6.1

The variation of the current with time is sinusoidal.

(a) Explain why, although the current is not in one direction only, power is converted in the resistor.

.....

.....

..... [2]

(b) Using the relation between root-mean-square (r.m.s.) current and peak current, deduce the value of the ratio

$$\frac{\text{average power converted in the resistor}}{\text{maximum power converted in the resistor}}.$$

ratio = ... [3]

© UCLES 2010

7 Electrons are moving through a vacuum in a narrow beam. The electrons have speed *v*. The electrons enter a region of uniform magnetic field of flux density *B*. Initially, the electrons are travelling at a right-angle to the magnetic field.
The path of a single electron is shown in Fig. 7.1.

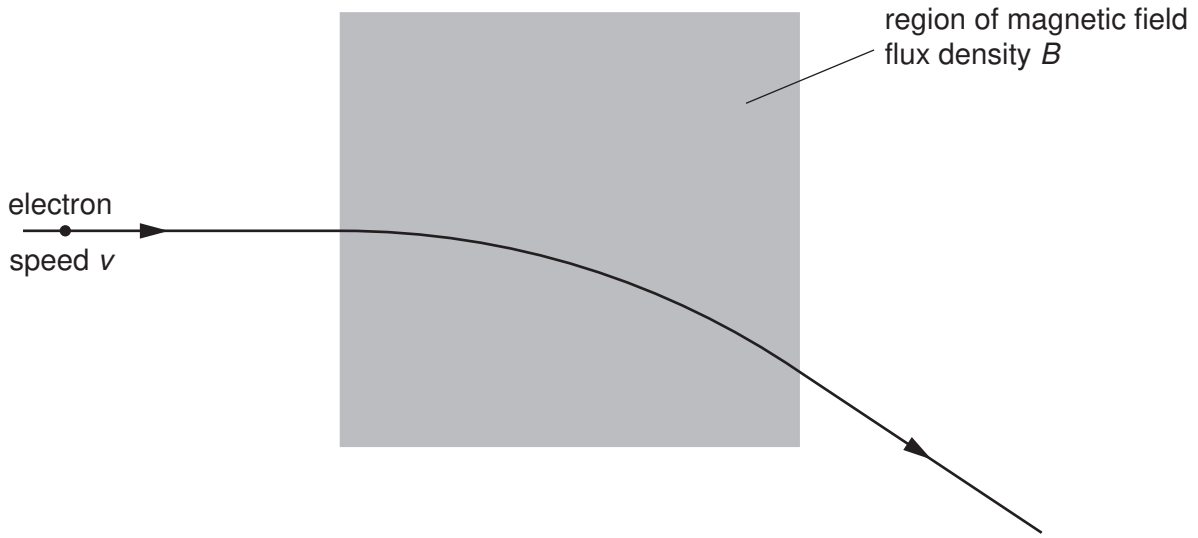

Fig. 7.1

The electrons follow a curved path in the magnetic field.

A uniform electric field of field strength *E* is now applied in the same region as the magnetic field.
The electrons pass undeviated through the region of the two fields.
Gravitational effects may be neglected.

(a) Derive a relation between *v*, *E* and *B* for the electrons not to be deflected. Explain your working.

.....

.....

.....

.....

..... [3]

(b) An α-particle has speed *v* and approaches the region of the two fields along the same path as the electron. Describe and explain the path of the α-particle as it passes through the region of the two fields.

.....

.....

..... [2]

8 **(a)** By reference to the photoelectric effect, state what is meant by the *threshold frequency*.

.....

.....

..... [2]

(b) The surface of a zinc plate has a work function of 5.8×10^{-19} J.
In a particular laboratory experiment, ultraviolet light of wavelength 120 nm is incident on the zinc plate. A photoelectric current I is detected.
In order to view the apparatus more clearly, a second lamp emitting light of wavelength 450 nm is switched on. No change is made to the ultraviolet lamp.

Using appropriate calculations, state and explain the effect on the photoelectric current of switching on this second lamp.

.....

..... [4]

© UCLES 2010

Section B

Answer **all** the questions in the spaces provided.

9 **(a)** **(i)** State, with reference to X-ray images, what is meant by *sharpness*.

.....

.....[1]

(ii) Describe briefly two factors that affect the sharpness of an X-ray image.

1. .....

.....

2. .....

.....
[3]

(b) An X-ray image is taken of the skull of a patient. Another patient has a CT scan of his head.
By reference to the formation of the image in each case, suggest why the exposure to radiation differs between the two imaging techniques.

.....

.....

.....

.....

.....[4]

10 **(a)** State three properties of an ideal operational amplifier (op-amp).

1. .....

2. .....

3. .....

[3]

(b) A circuit incorporating an ideal op-amp is to be used to indicate whether a door is open or closed.
Resistors, each of resistance *R*, are connected to the inputs of the op-amp, as shown in Fig. 10.1.

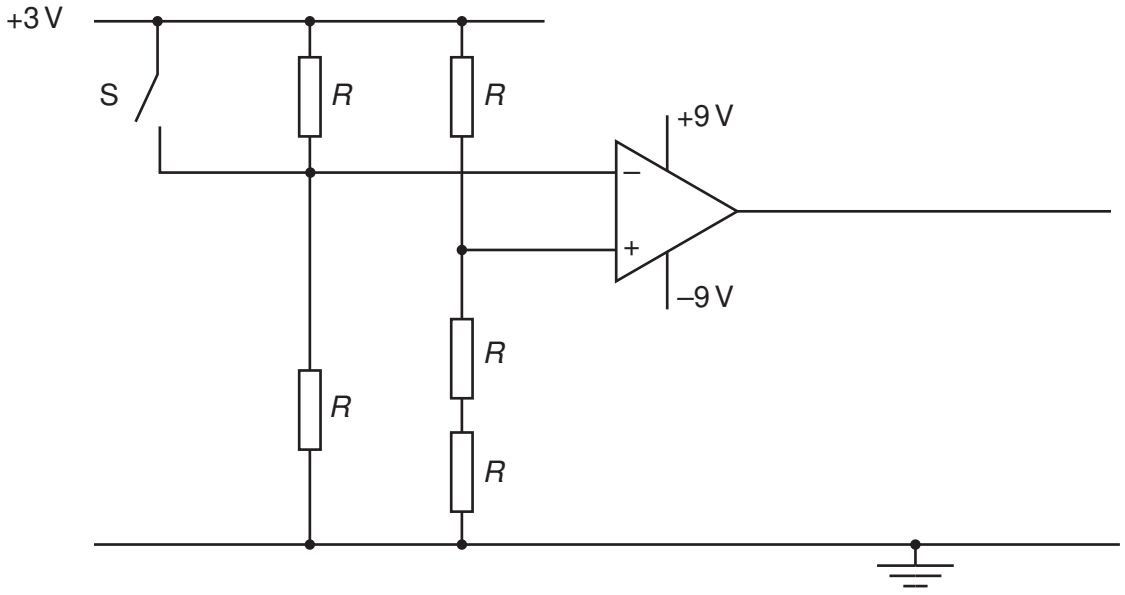

Fig. 10.1

The switch S is attached to the door so that, when the door is open, the switch is open. The switch closes when the door is closed.

(i) Explain why the polarity of the output of the op-amp changes when the switch closes.

.....

.....

.....

.....[3]

(ii) A red light-emitting diode (LED) is to be used to indicate when the door is open. A green LED is to indicate when the door is closed.

On Fig. 10.1,

1. draw symbols for the LEDs to show how they are connected to the output of the op-amp, [1]

2. identify the green LED with the letter G. [1]

Please turn over for Question 11.

11 The linear attenuation (absorption) coefficient μ for X-ray radiation in bone, fat and muscle is given in Fig. 11.1.

	μ / cm^{-1}
bone	2.9
fat	0.90
muscle	0.95

Fig. 11.1

(a) A parallel X-ray beam of intensity I_0 is incident either on some bone or on some muscle.
The emergent beam has intensity I.

Calculate the ratio $\frac{I}{I_0}$ for a thickness of

(i) 1.5 cm of bone,

ratio = ... [2]

(ii) 4.6 cm of muscle.

ratio = ... [1]

(b) Suggest why, on an X-ray plate, the contrast between bone and muscle is much greater than that between fat and muscle.

.....

.....

.....

.....[3]

© UCLES 2010

12 **(a)** Data may be transmitted as an analogue signal or as a digital signal.

(i) Explain what is meant by

1. an *analogue* signal,

.....

.....

.....

2. a *digital* signal.

.....

.....

.....

[3]

(ii) State two advantages of the transmission of data in digital form.

1. .....

.....

2. .....

.....

[2]

(b) The block diagram of Fig. 12.1 represents a system for the digital transmission of analogue data.

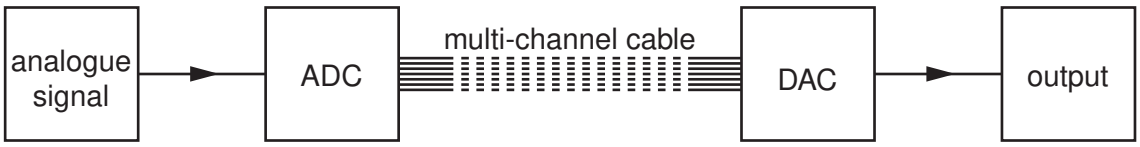

Fig. 12.1

(i) Describe the function of the ADC (analogue-to-digital converter).

.....

.....

.....[2]

(ii) Suggest why the transmission cable has a number of channels.

.....

..... [1]

BLANK PAGE

Permission to reproduce items where third-party owned material protected by copyright is included has been sought and cleared where possible. Every reasonable effort has been made by the publisher (UCLES) to trace copyright holders, but if any items requiring clearance have unwittingly been included, the publisher will be pleased to make amends at the earliest possible opportunity.

University of Cambridge International Examinations is part of the Cambridge Assessment Group. Cambridge Assessment is the brand name of University of Cambridge Local Examinations Syndicate (UCLES), which is itself a department of the University of Cambridge.

© UCLES 2010